The Development, Design and Demonstration of Vacuum Cathode Arc Thruster (VAT)

真空陰極電弧推進器之發展、設計與測試

Reporter: Jun-You Pan (潘均祐)
Advisor: Yueh-Heng Li (李約亨)

Date: 2019/Jan/28

2019 Master Thesis Oral Defence

Background

- **Satellite Classification**
  - Large satellite (> 1000Kg)
  - Medium-sized satellite (500-1000Kg)
  - Small satellite (< 500Kg)
    - Minisatellite (100–500 kg)
    - Microsatellite (10–100 kg)
    - Nanosatellite (1–10 kg)
    - Picosatellite (0.1–1 kg)
    - Femtosatellite (0.01–0.1 kg)

[Canadian Space Agency]

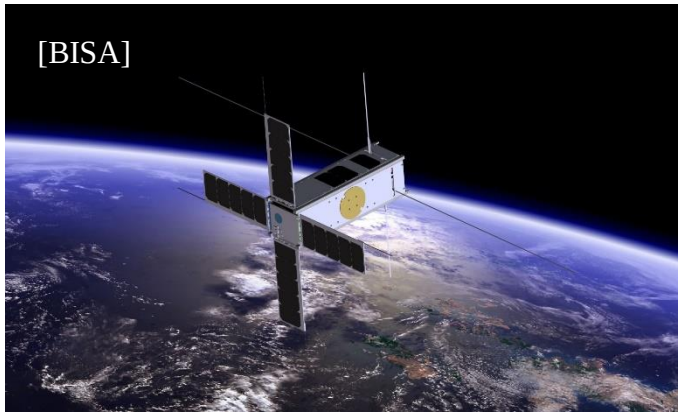
[BISA]


[LLNL]

Background

- **Microsatellite missions**

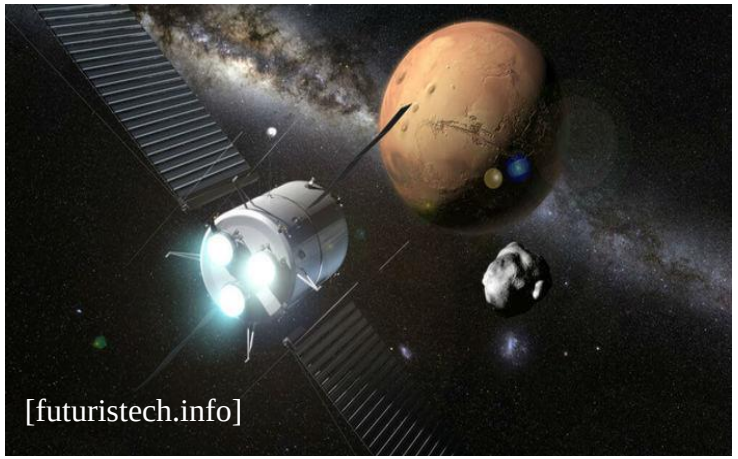

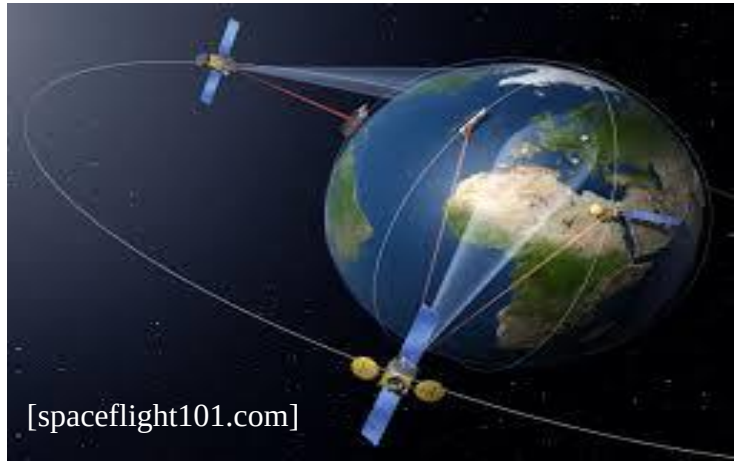

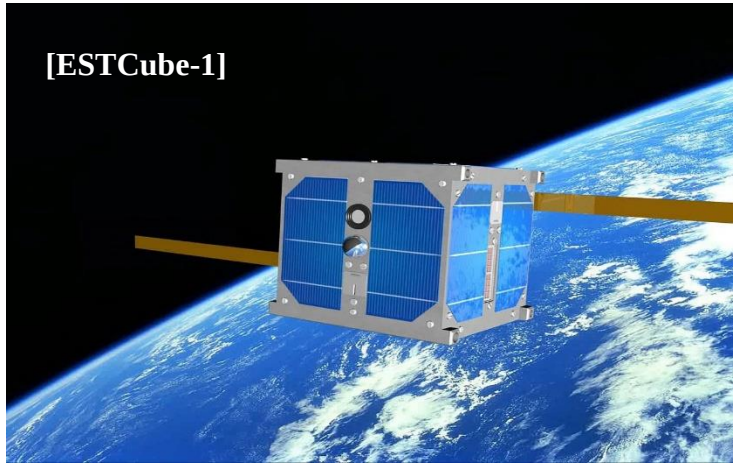

✓ Interplanetary Travel

✓ Orbit transfer

✓ Attitude Control

Introduction – Plasma

- **States of matters**

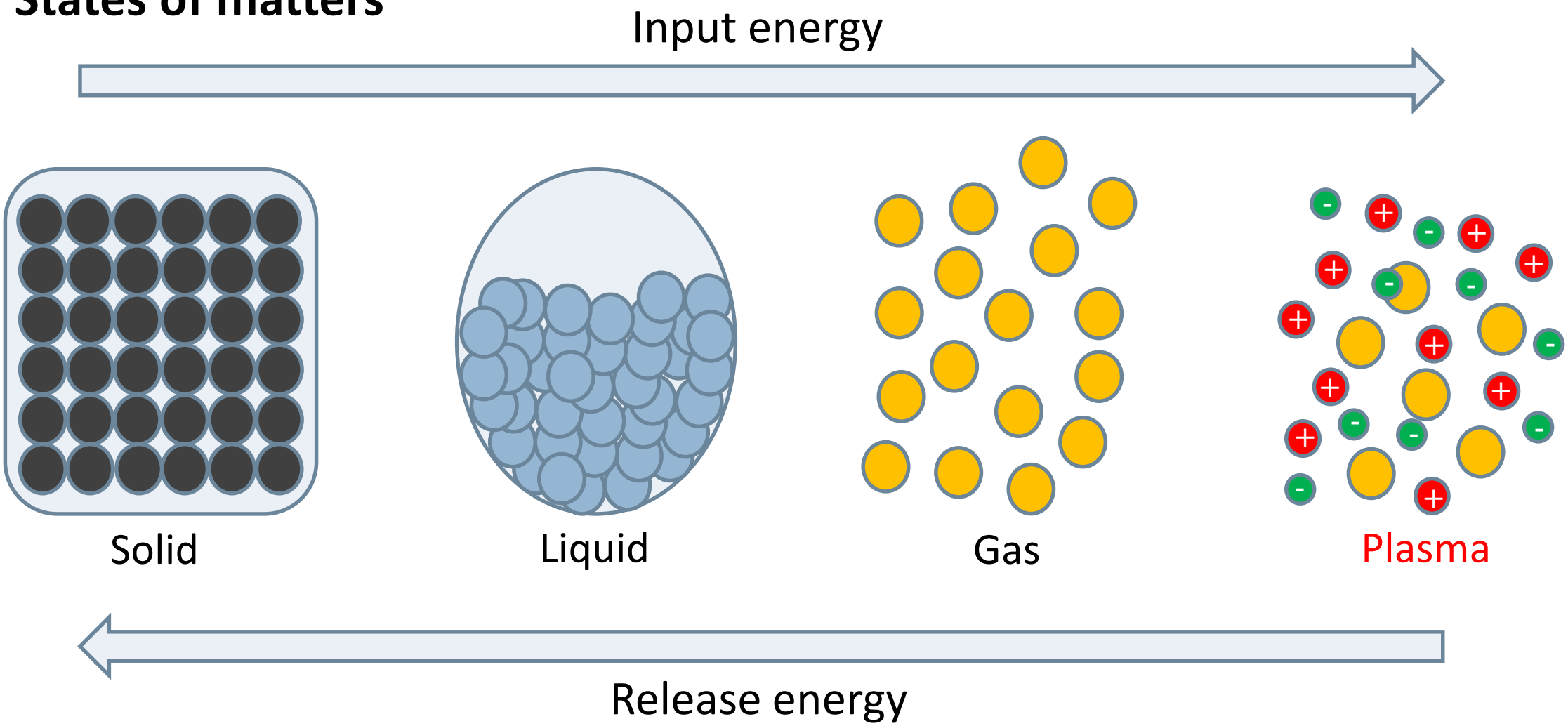

Introduction – Electric Propulsion(EP)

- **Compared with the conventional chemical propulsion**

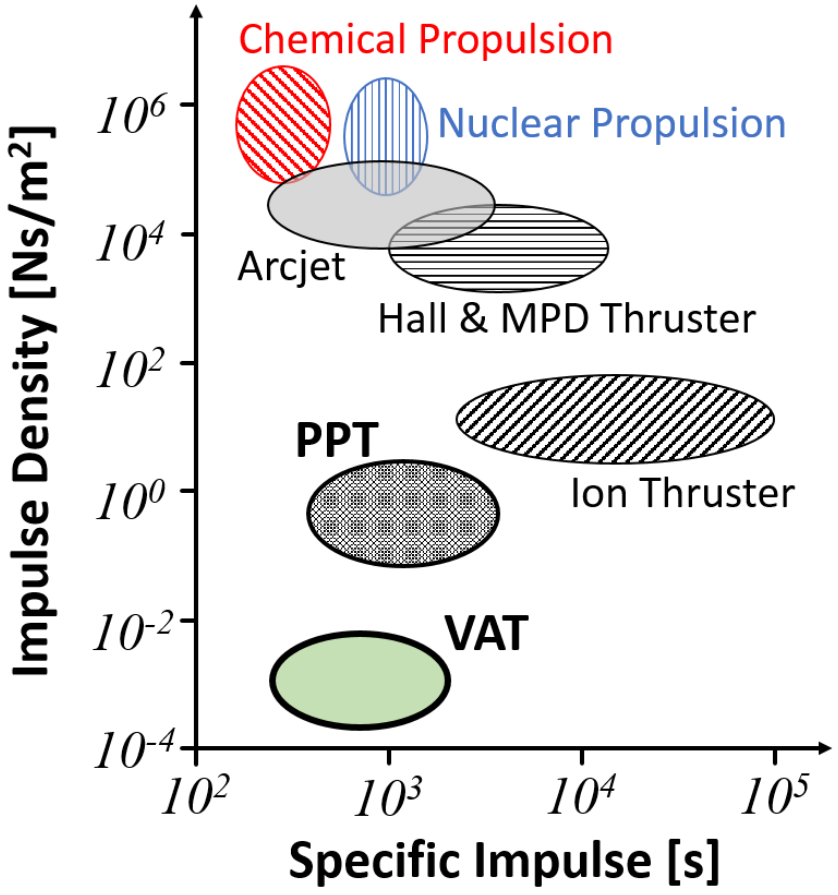

Specific impulse (I_{sp}) $\equiv \frac{T}{\dot{m}g} = \frac{\dot{m}V}{\dot{m}g} = \frac{V}{g}$

where the T is thrust, $\dot{m}$ is mass flow rate of propellant, V is exhausting velocity and g is gravity acceleration constant.

Higher I_{sp} → High fuel to thrust rate on propellant

Introduction – Electric Propulsion(EP)

- **Classification of EP based on ion acceleration mechanism**

✓ **Electrothermal thruster**

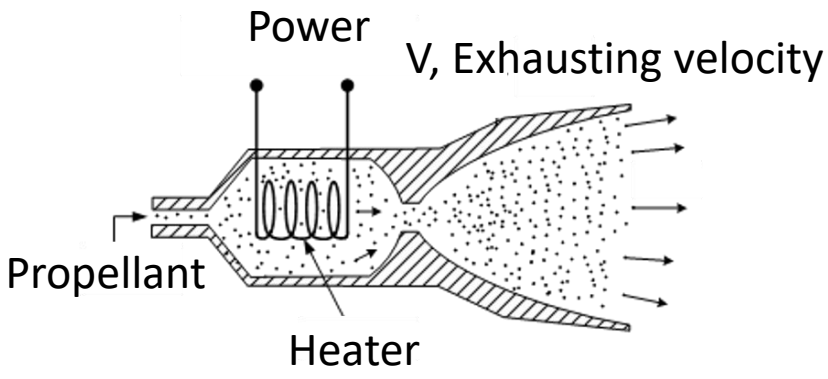

[blog.sina.com.cn]

EX: Resistojets, Arcjets and Vacuum cathode arc thruster

✓ **Electrostatic thruster**

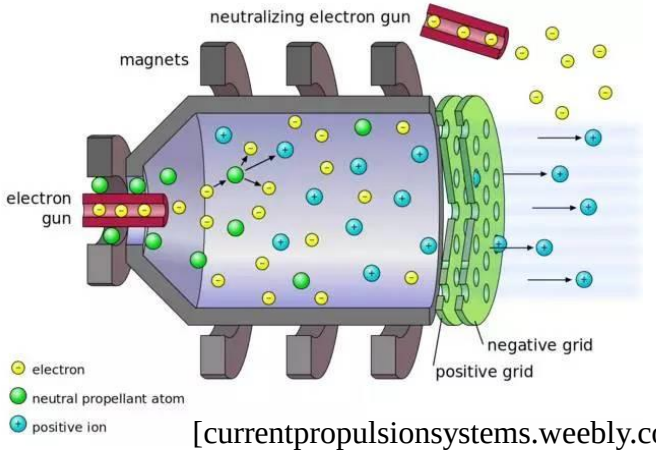

[currentpropulsionsystems.weebly.com]

EX: Ion thruster and Field emission electric thruster

✓ **Electromagnetic thruster**

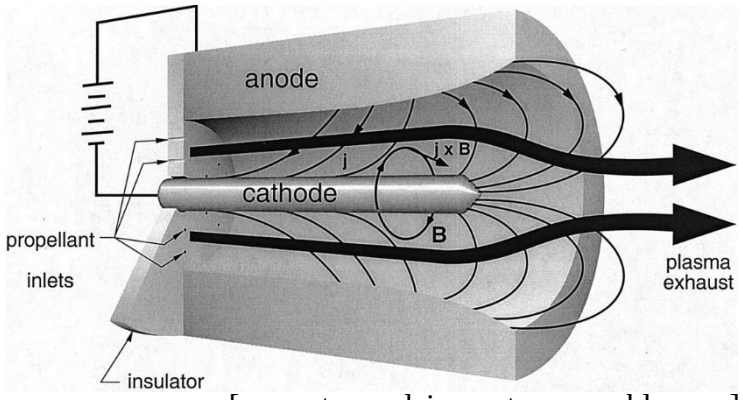

[currentpropulsionsystems.weebly.com]

EX: Pulse plasma thruster, Hall thruster and MPD thruster

Introduction – VAT

- **Vacuum cathode arc thruster (VAT)**
  - Metal propellant

    Specific impulse ranging from 1100s (Ta) to 3000s (Al)

    (Dethlefsen, 1968; Gilmour & Lockwood, 1972)
  - Triggerless ignition method

    (Anders *et al.*, 1998)
  - Inductor storage energy device

    (Schein *et al.*, 2002)

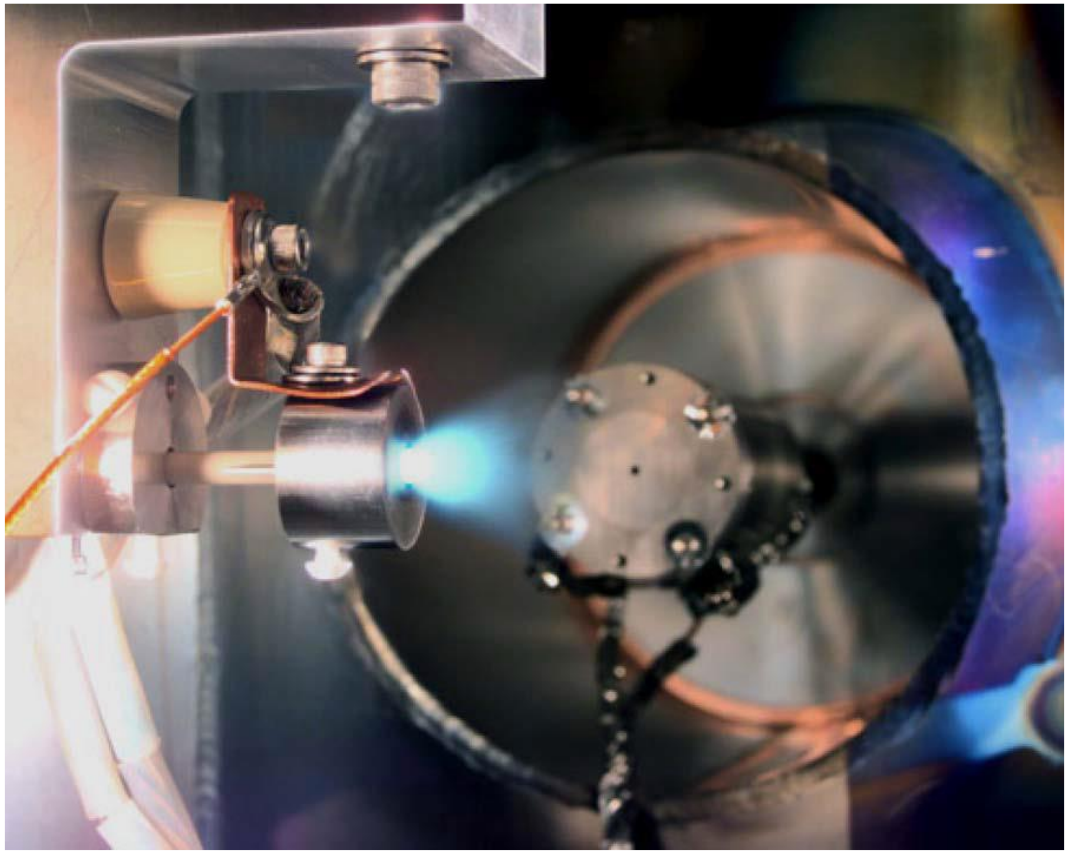

[Polk, 2008]

Introduction – VAT

Principle of operation

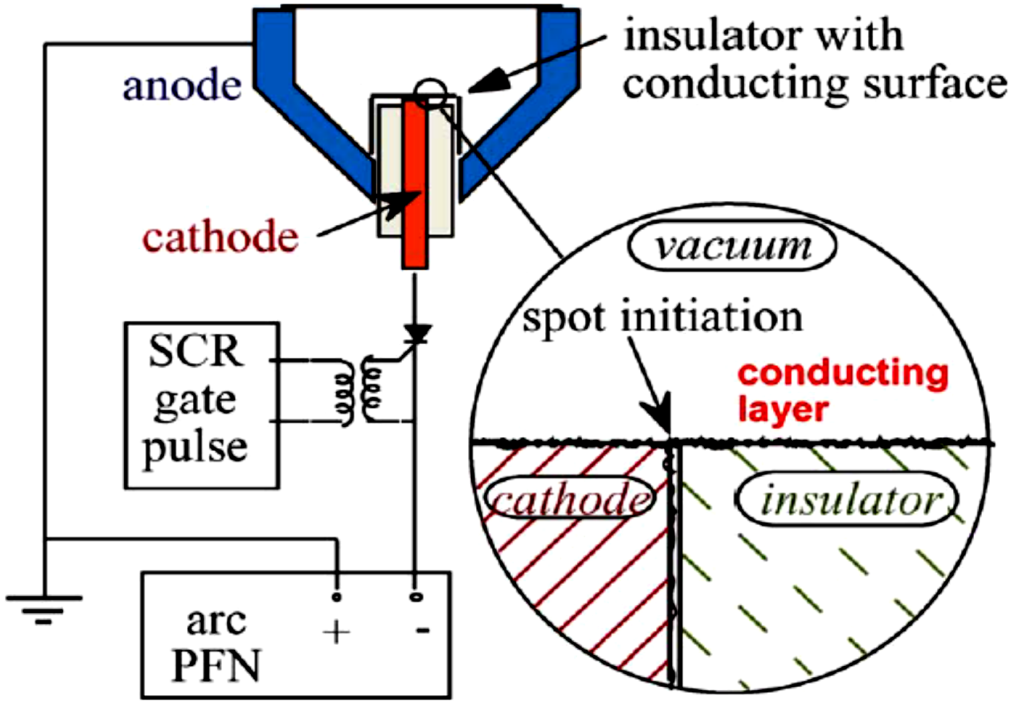

Principle of triggerless ignition,
[Alameda Applied Sciences Corporation]

Triggerless ignition method

Combine

Inductor storage energy device

✓ No need ignitor
✓ Lower energy input

Introduction – VAT

- **Ion acceleration mechanism**

✓ High pressure gradient produced from the plasma plume
✓ Electrostatic attraction of the negative "potential hump"
✓ Electron-ion collision (electrons deliver energy to ions by collision)

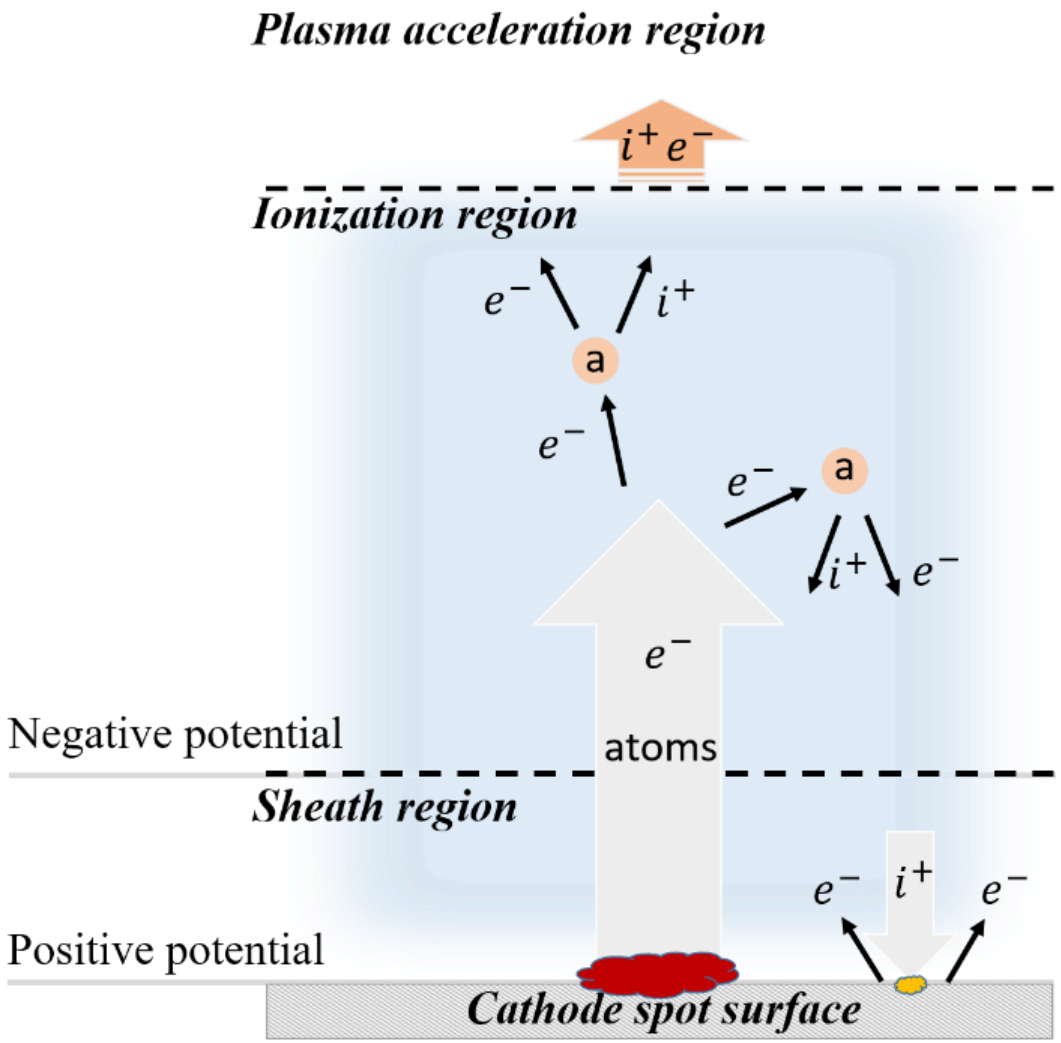

Introduction – Different VAT designs

- George Washington University and University of Southern California

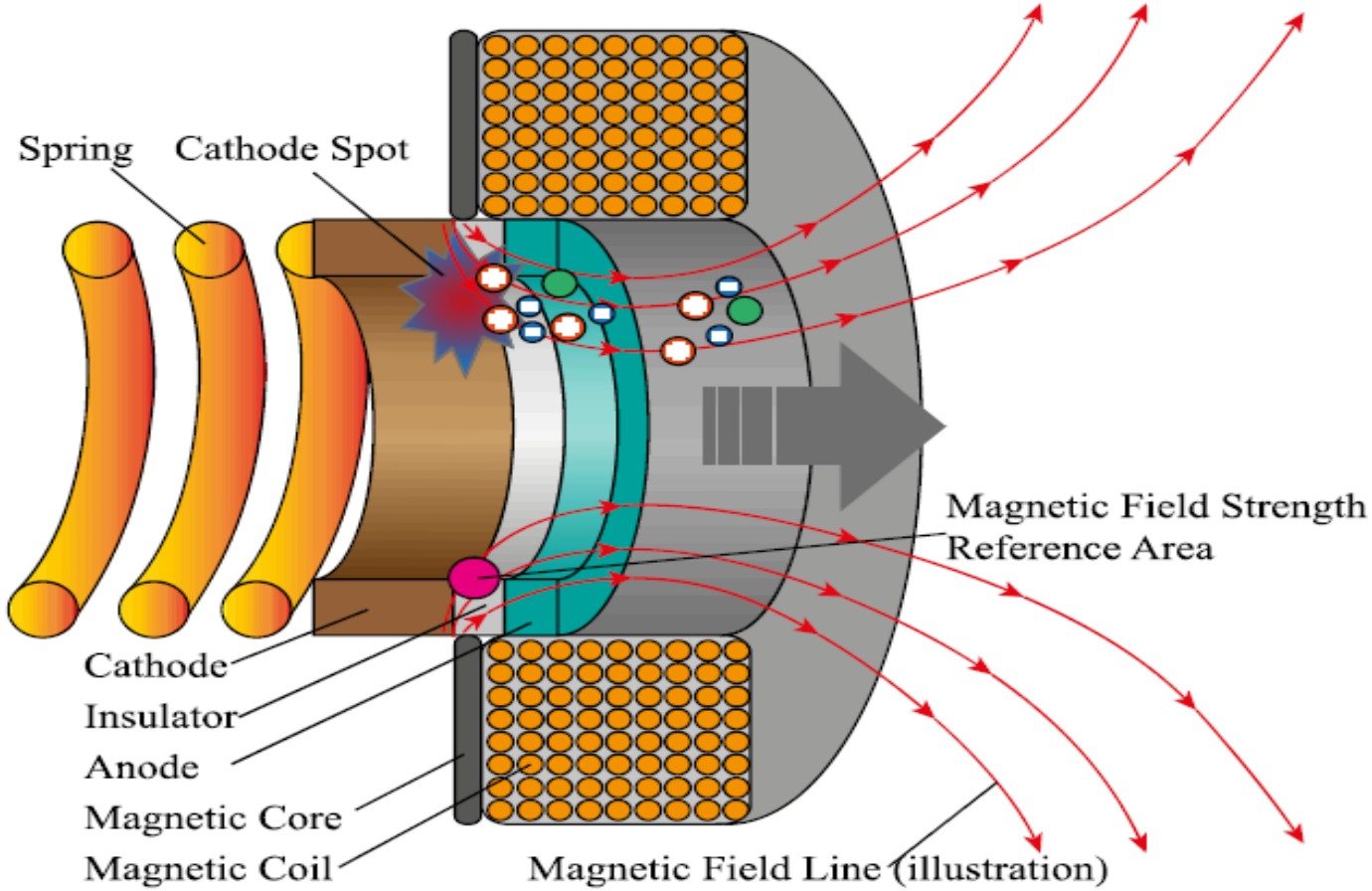

Impulse bit = 0.1 μN·s without B field
= 1.1 μN·s with B = 0.3 T

Thrust = 1 μN – 0.05mN

Introduction – Different VAT designs

- **Alameda Applied Science Corporation (AASC)**

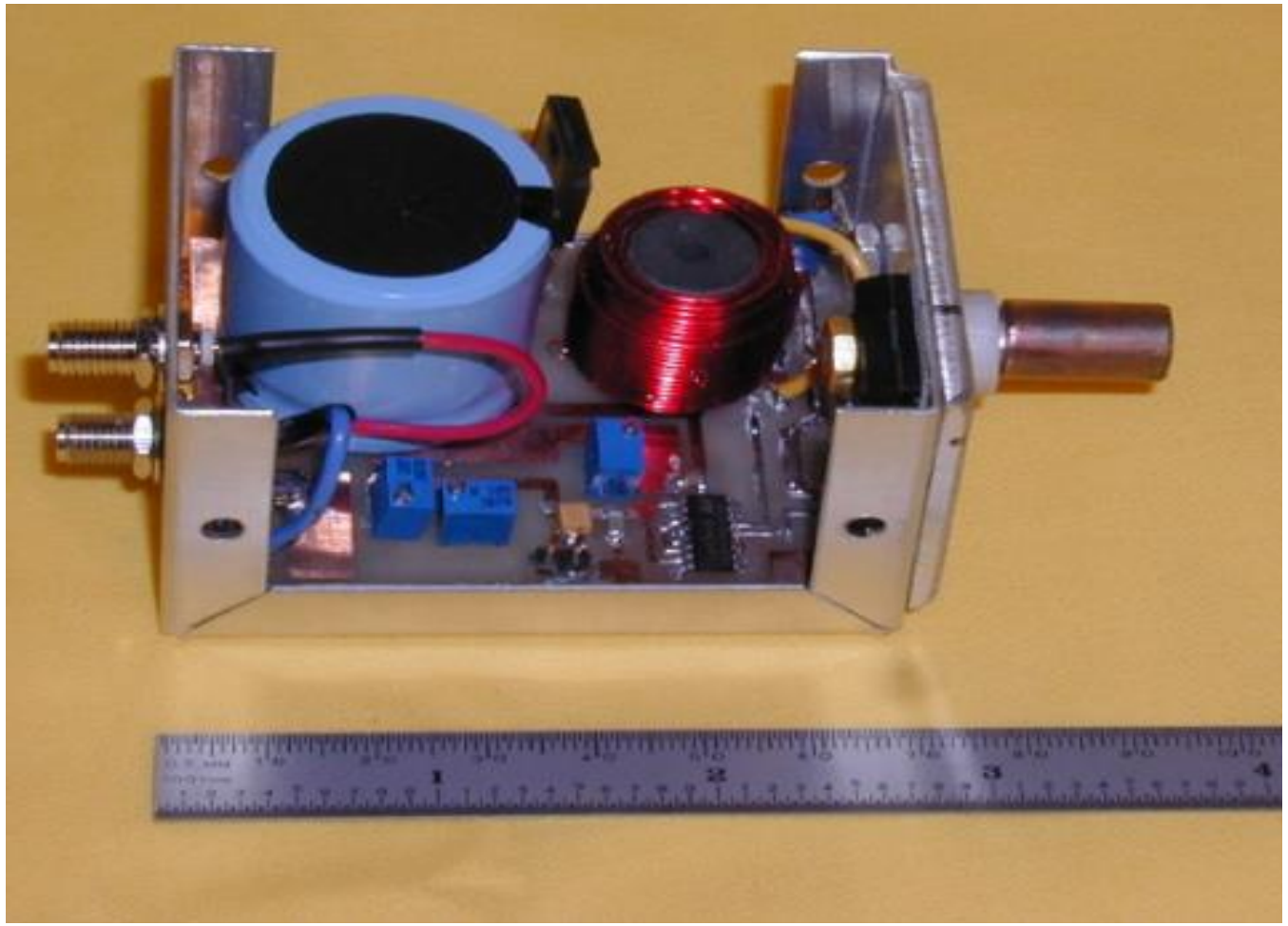

Impulse bit = 1 μN·s

Specific impulse = 1000s

Introduction – Different VAT designs

- **Alameda Applied Science Corporation (AASC)**

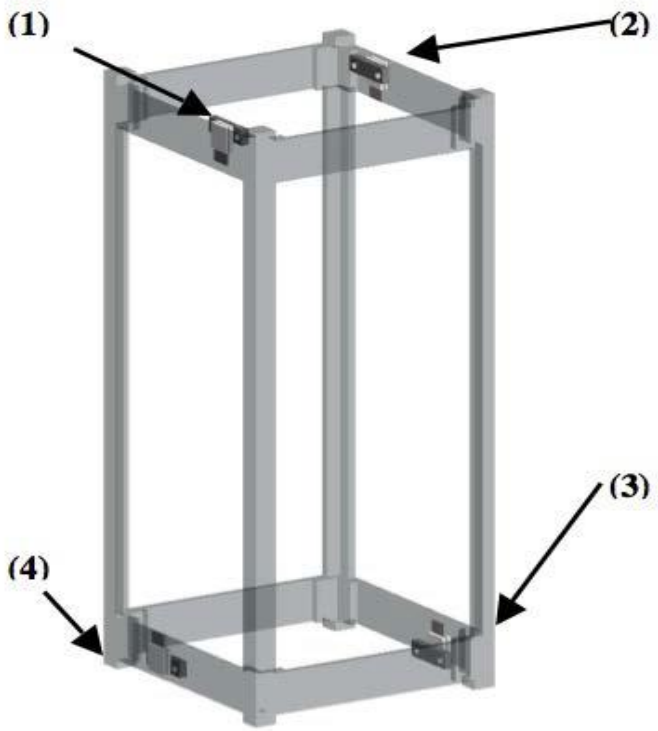

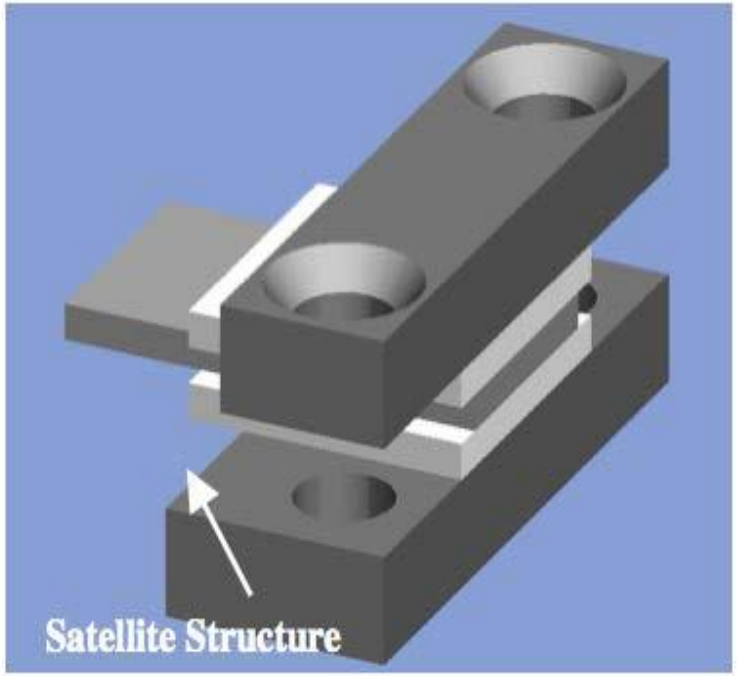

Impulse bit = 0.25 μN·s – 50 μN·s

Specific impulse > 1000s

Introduction – VAT practical application

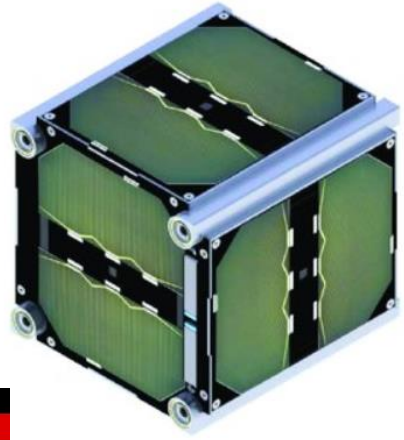

UWE-4 nanosatellite
(German Federal Armed Forces)
Lunch date: 2018/12/27

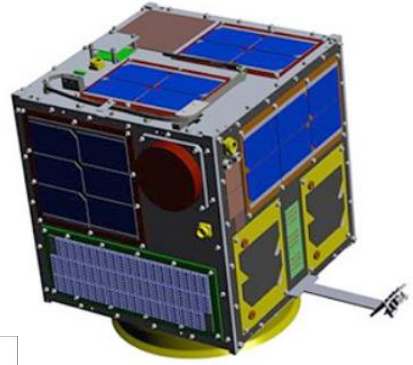

HORYU nanosatellite
(Kyushu Institute of Technology)
Lunch date: 2016/2/17

BRICSat-P CubeSat
(US Air Force)
Lunch date: 2015/5/20

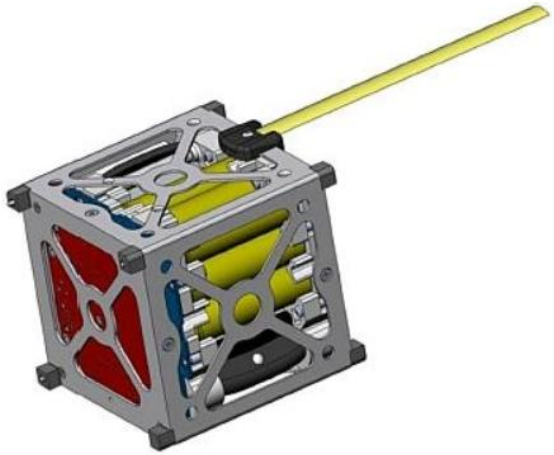

PhoneSat
(George Washington University & NASA)
Lunch date: 2013/11/20

Motivation

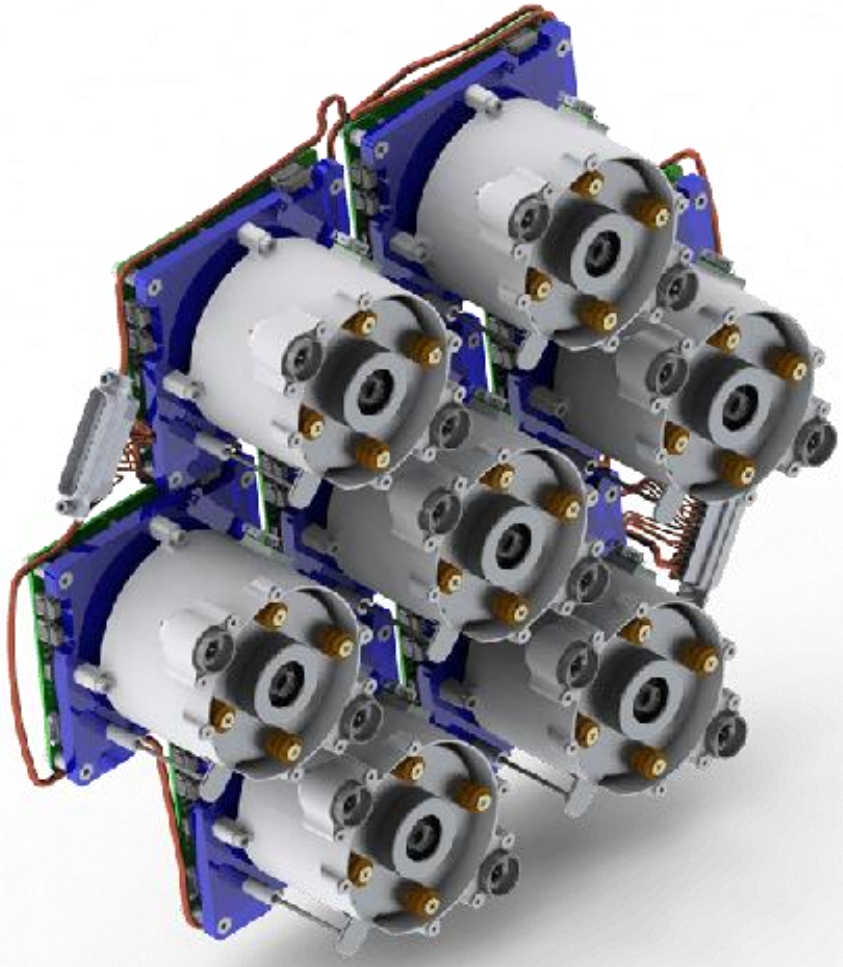

Cluster of Nano Thruster for SmallSats

[CubeSatShop]

	VAT	PPT
Power requirement	Low	High
Weight	Light	Heavy
Size	Small	Large

Experimental Apparatus – Thruster

VAT geometry and experimental conditions literature summary

	Cathode properties		Pulse characteristics	
	Geometry (Diameter)	*Material*	*Peak arc current (A)*	*Discharging time (μs)*
Sekerak	Rod (3 mm)	Ti	14	1500
Schein *et al.*	Rod (3 mm)	Cr, Y	10 ~ 25	250 ~ 500
Schein *et al.*	Rod (30 mm)	Ti, W	10	100
Marks *et al.*	Rod (3 mm)	Cu, Al	50 ~ 250	20000
Lun	Rod (6 mm)	Bi, Al, Fe	50	4000
Pietzka *et al.*	Hollow (4 mm, external)	Cu	10 ~ 50	250 ~ 400
Zhuang *et al.*	Hollow (6 mm, external)	Ti	40	400
Lun	Planar (10 × 16 × 2 mm)	Al	200 ~ 800	0.4

Experimental Apparatus – Thruster

- **Design of the Vacuum Cathode Arc Thruster (VAT)**

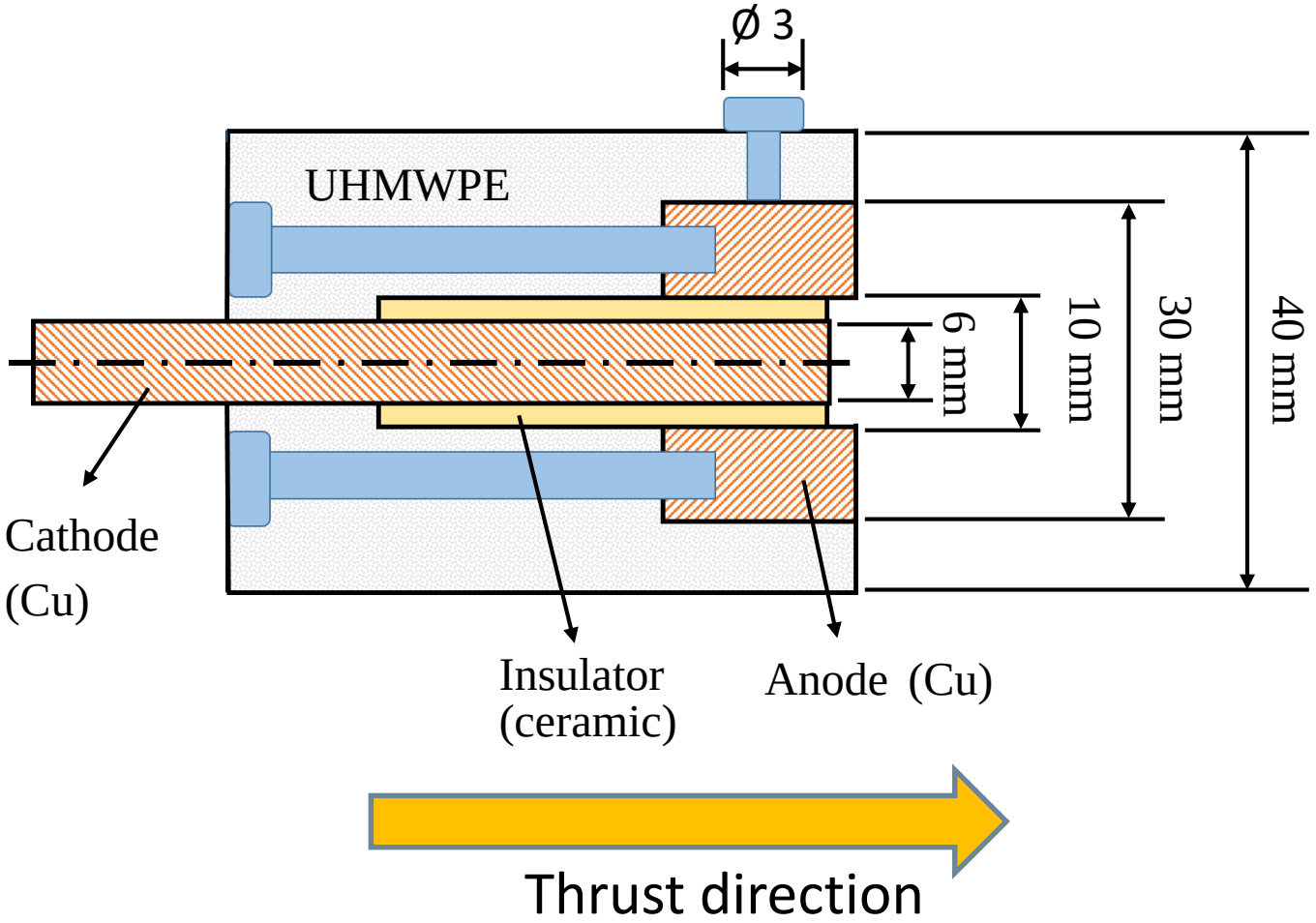

VAT, Top view

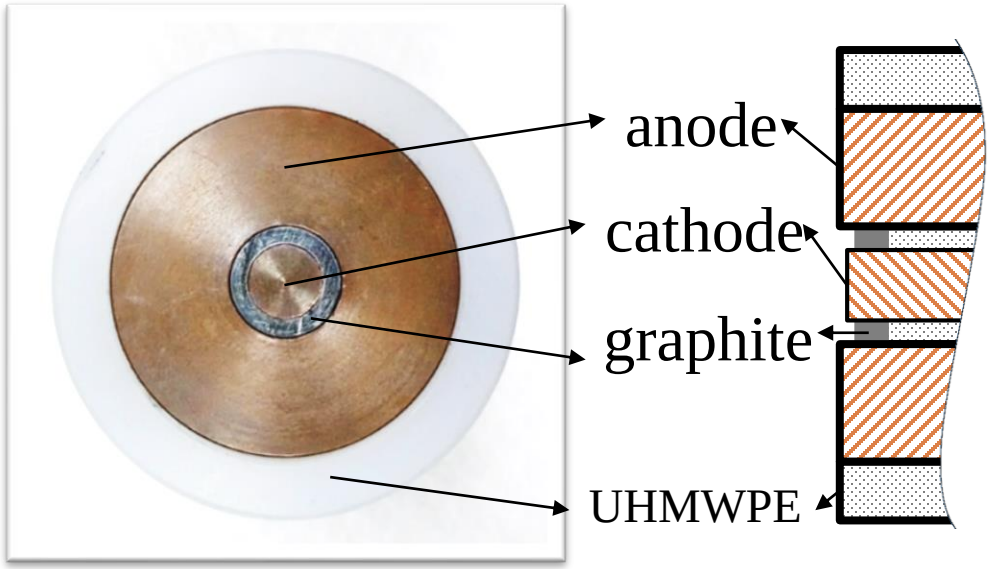

- ✓ Coaxial type
- ✓ Simple structure
- ✓ Miniaturization
- ✓ Light weight (~100g)

Experimental Apparatus – Circuit

- **Inductor storage energy device**

$$V(t) = L\frac{di}{dt} \text{ (Up to 700V)}$$

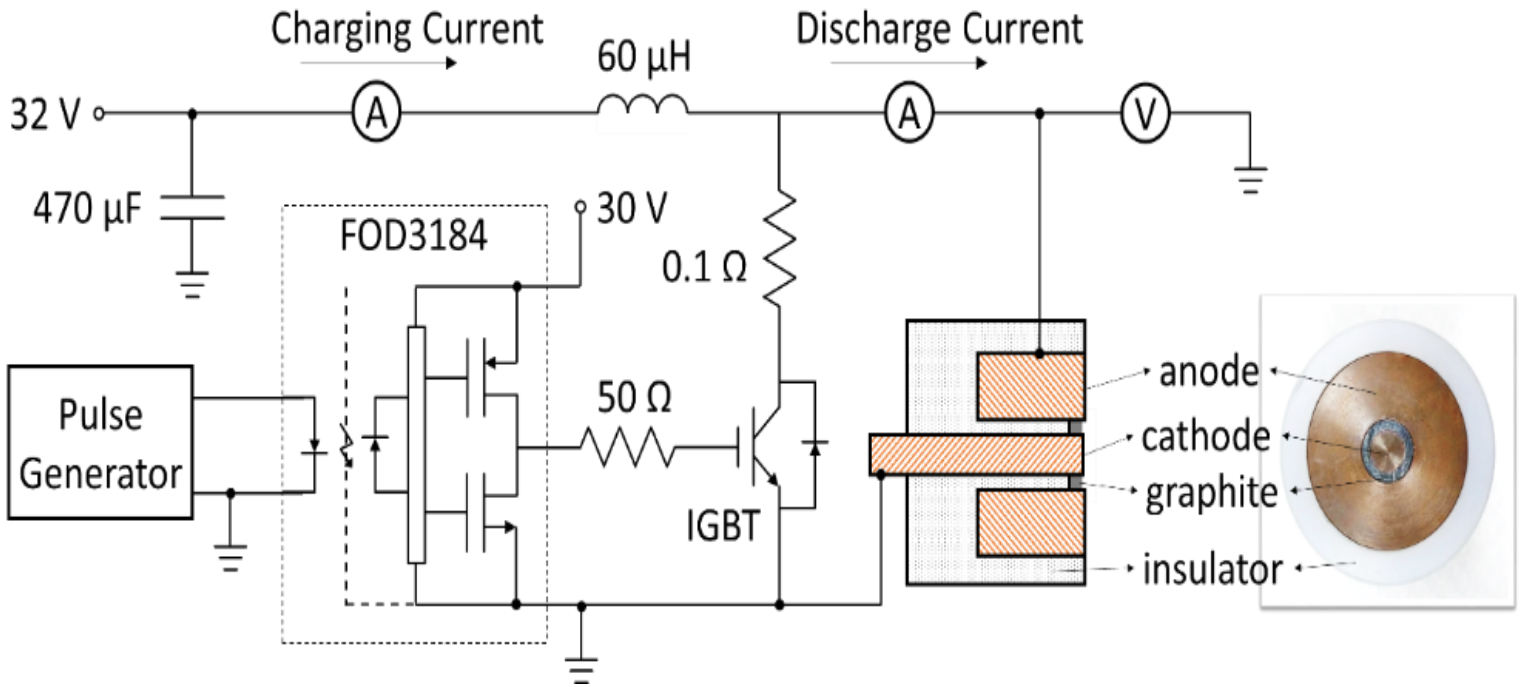

Step 1

Inductor charging formula:

$$I(t) = \frac{V_p}{R}\left(1-e^{-\frac{Rt}{L}}\right)$$ → Get t

Step 2

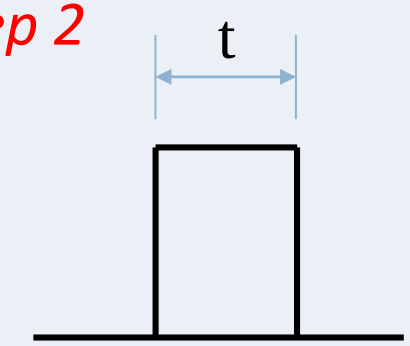

TTL pulse → Control IGBT

IGBT = Insulated Gate Bipolar Transistor

Experimental Apparatus – Circuit

- **First stage – power on**

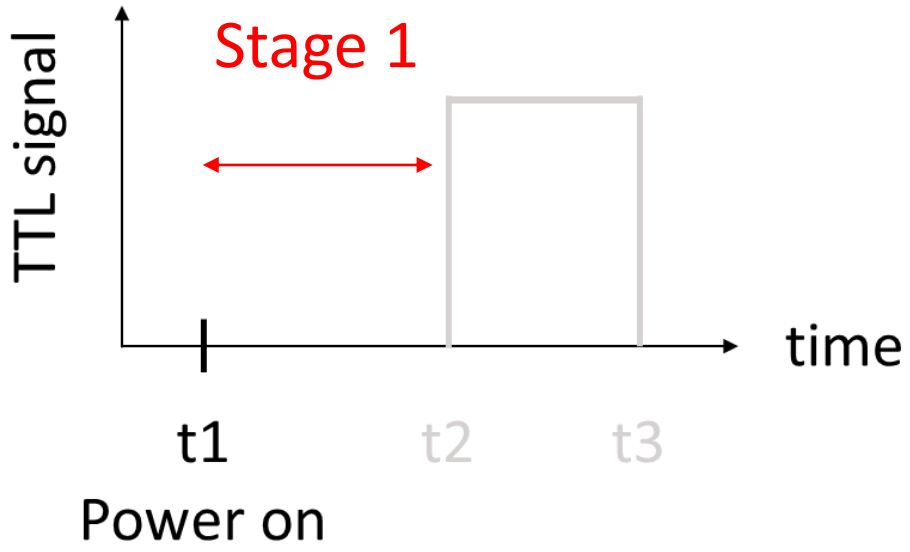

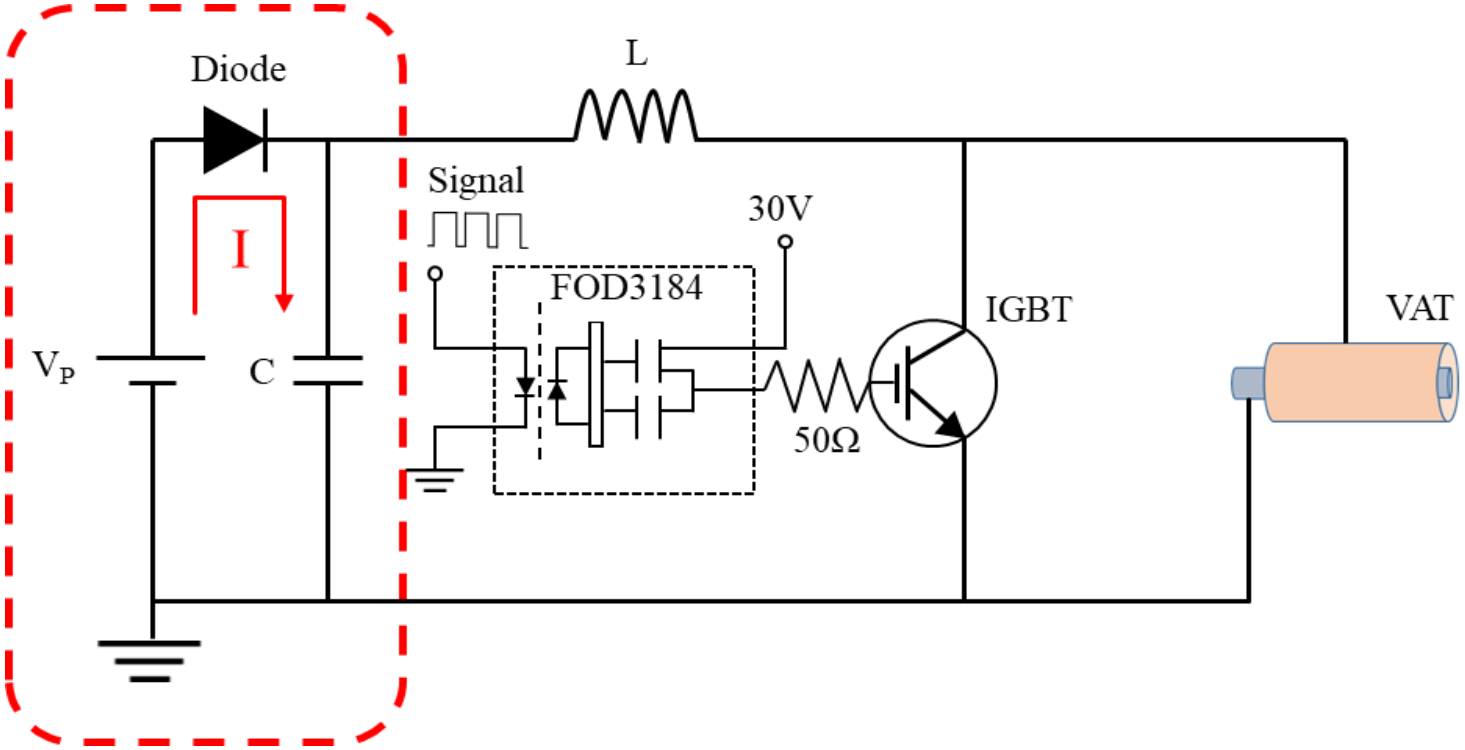

Experimental Apparatus – Circuit

- **Second stage – trigger TTL signal**

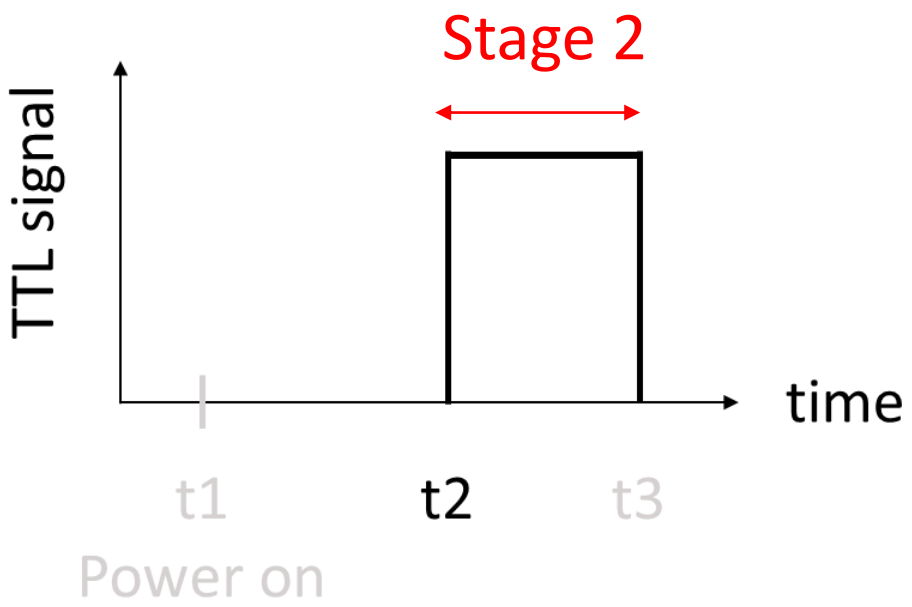

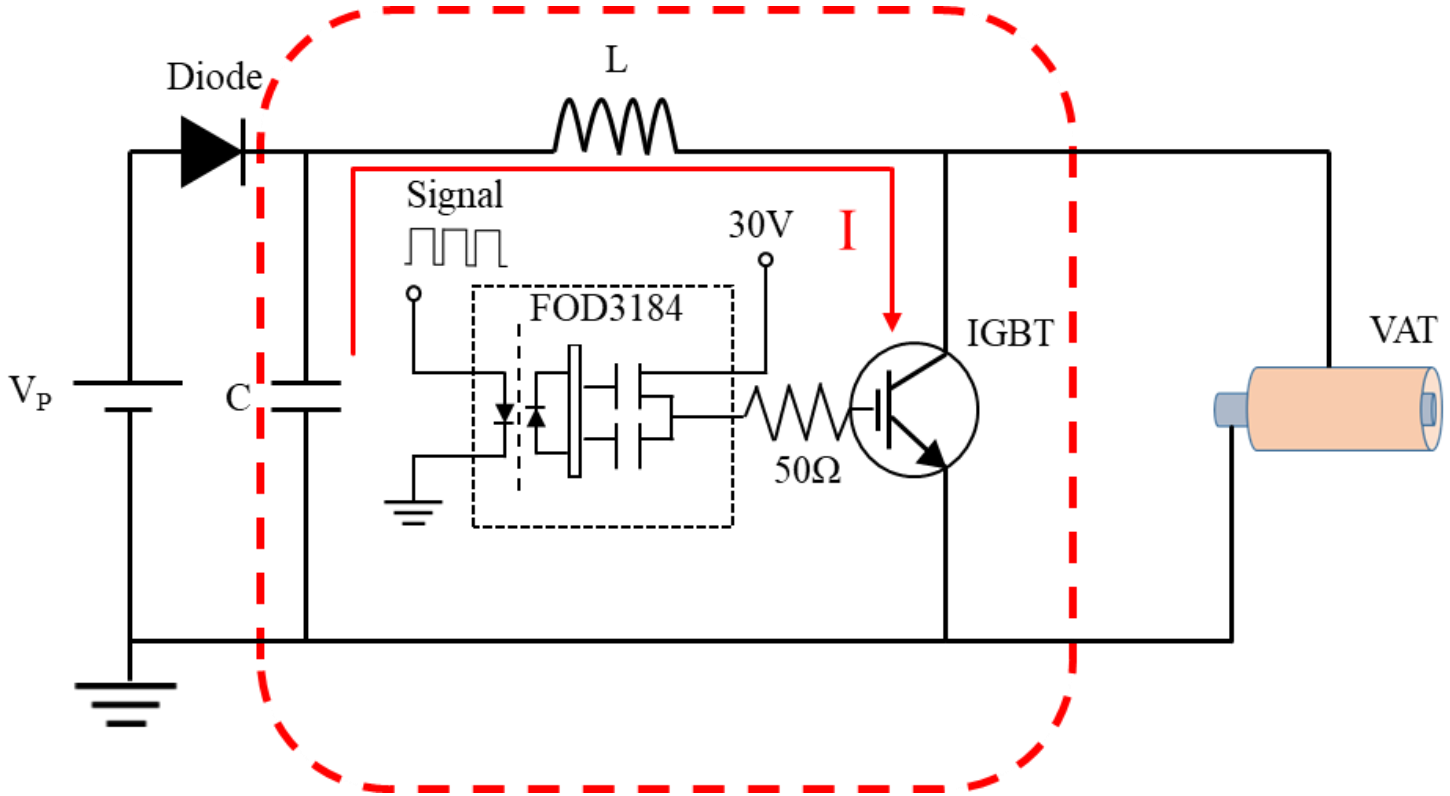

Experimental Apparatus – Circuit

- **Third stage – Arc discharge**

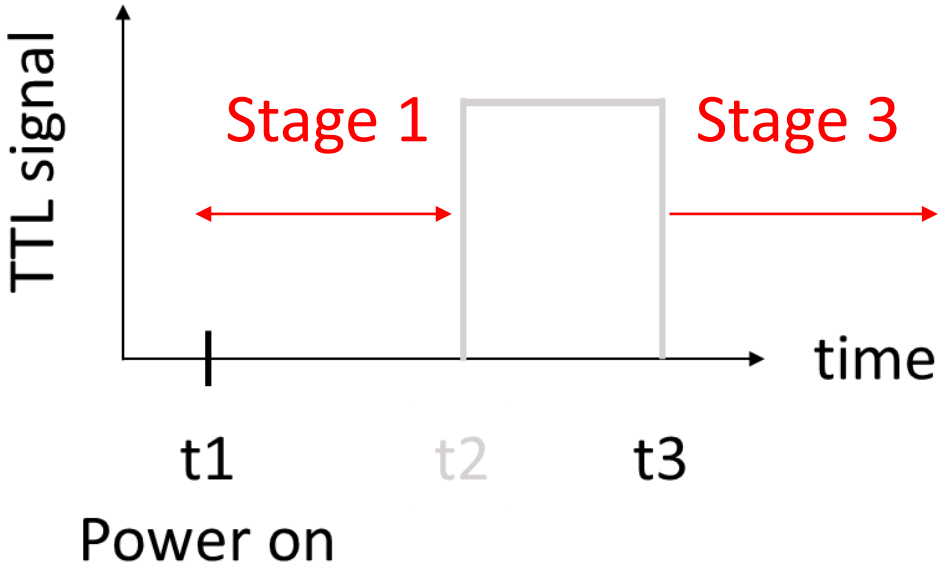

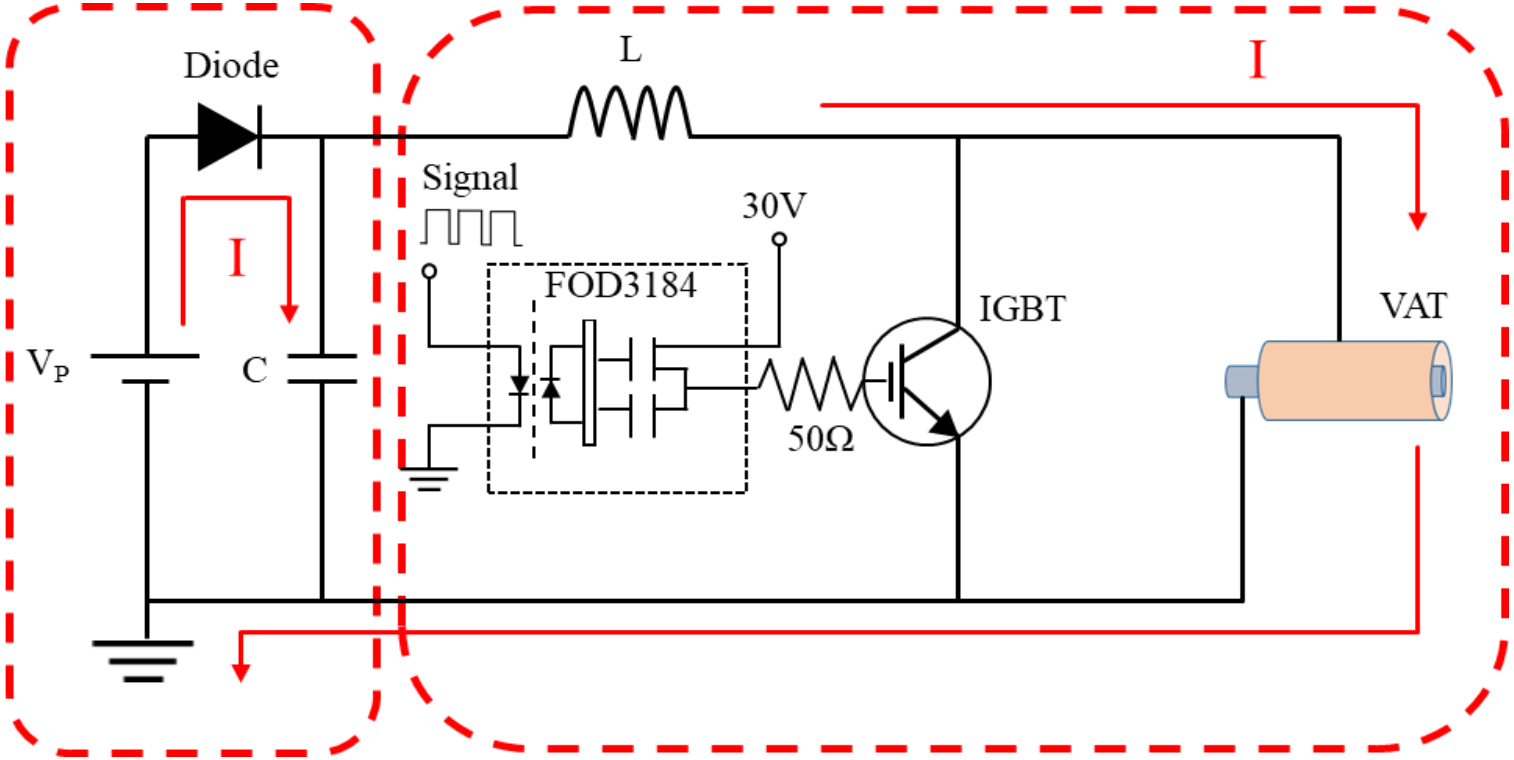

Experimental Apparatus – Ion Detector

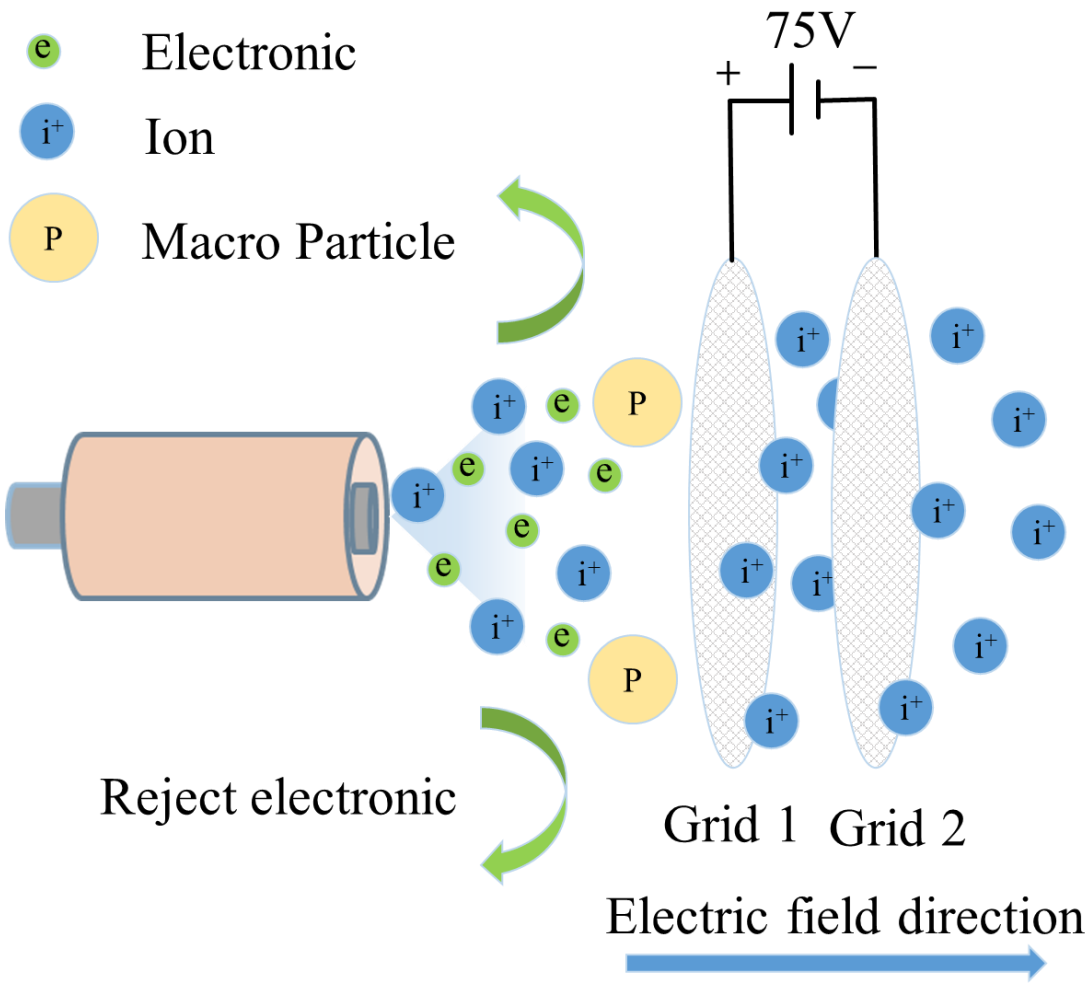

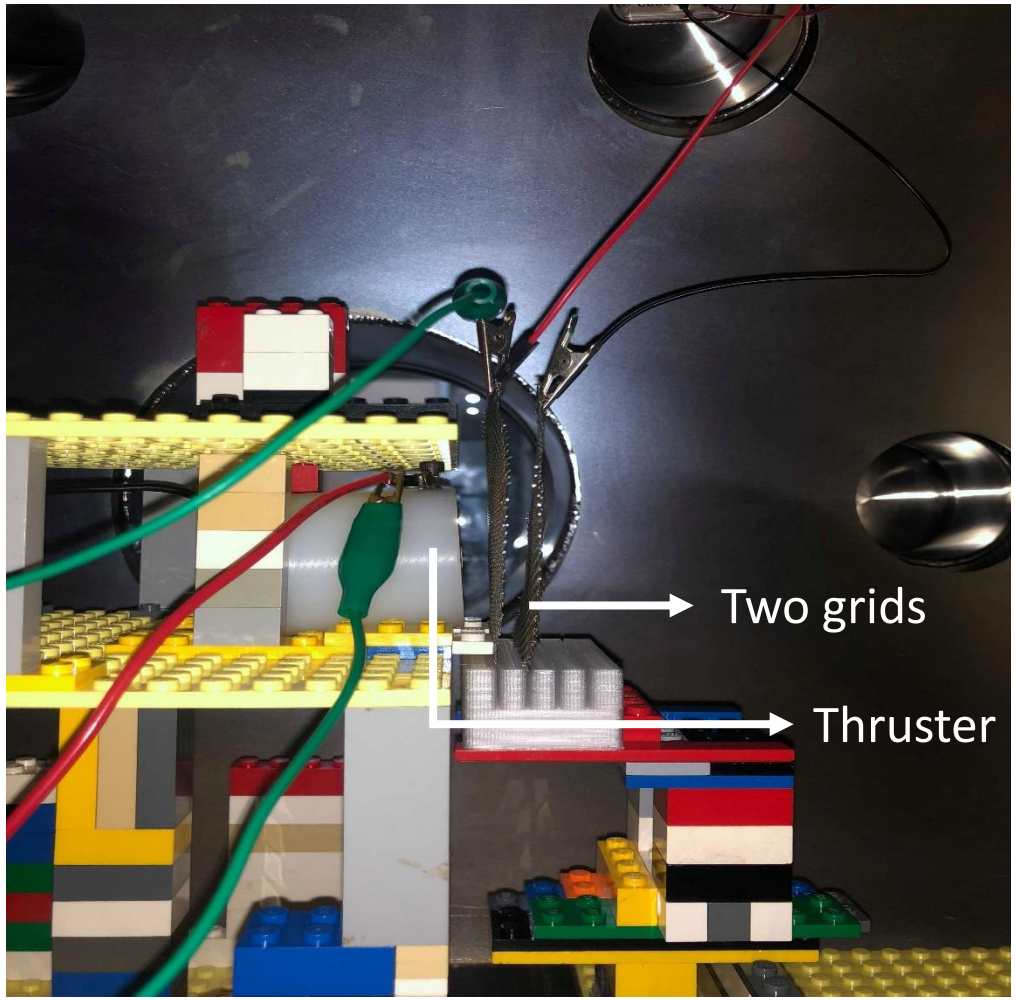

Experimental Apparatus – Vacuum System

Configuration of vacuum system

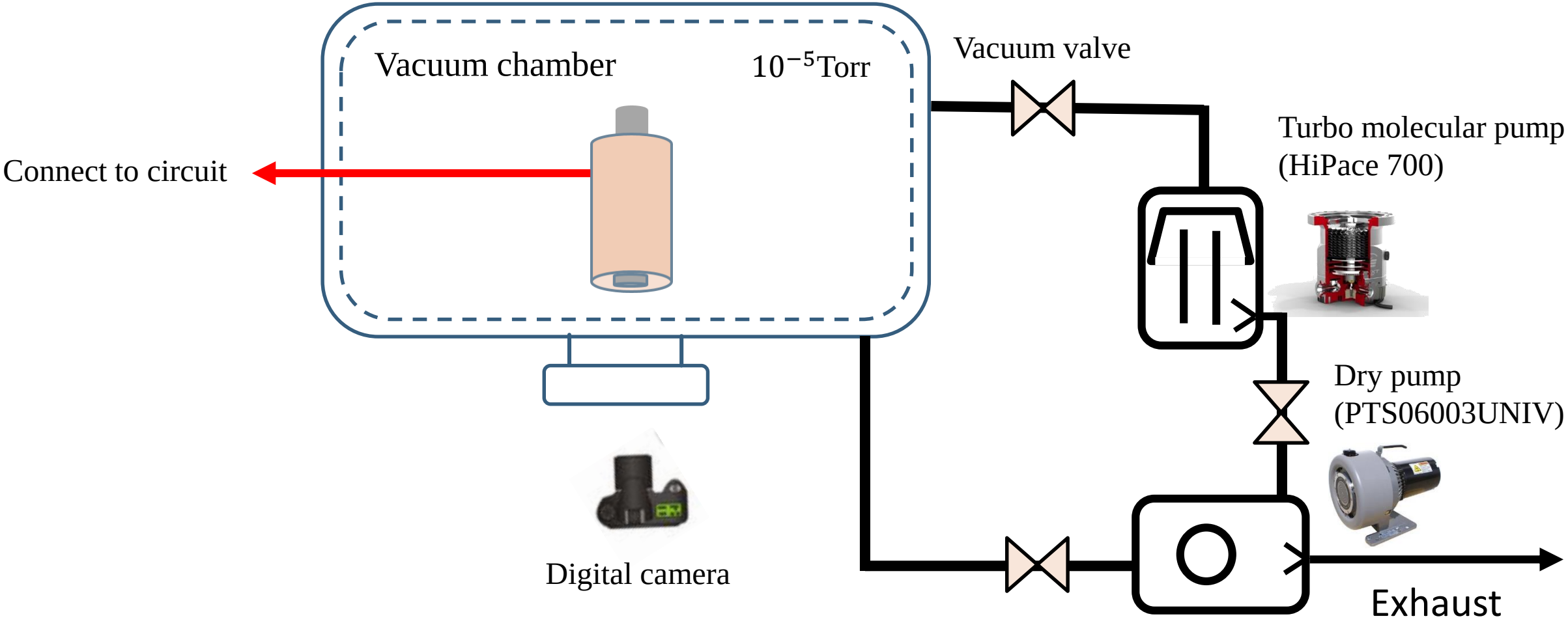

Results and Discussion - Aluminum

Conditions

Parameter	Value
Induce Voltage	Up to 700V
Charge Current	50 A
Discharge Current	48 A
Discharge Voltage	30-40V
Charge Time	800 μs
Discharge Time	300-400 μs
Pressure	10^{-5} Torr
Resistance	1-1.33 Ω
Inductance	220 μH

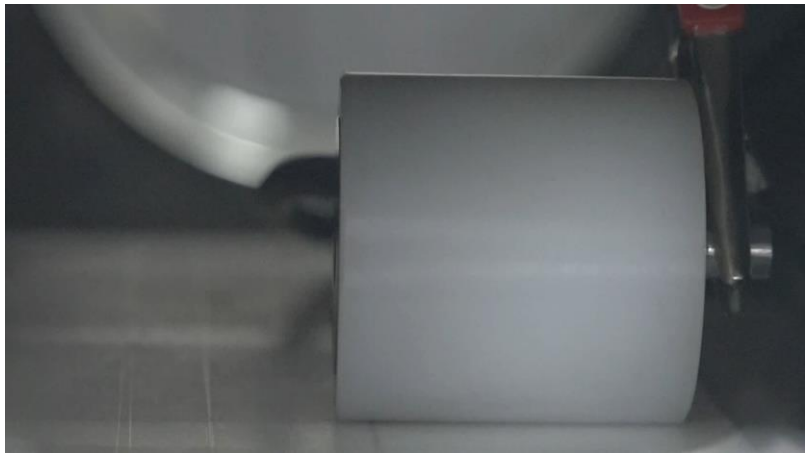

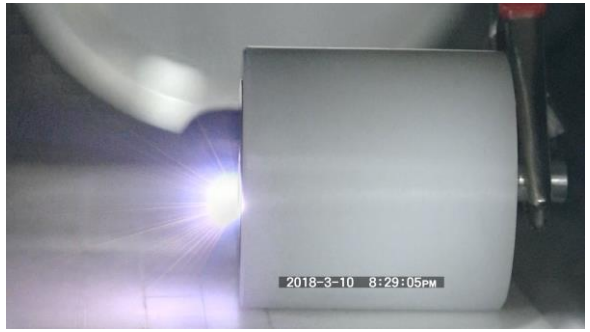

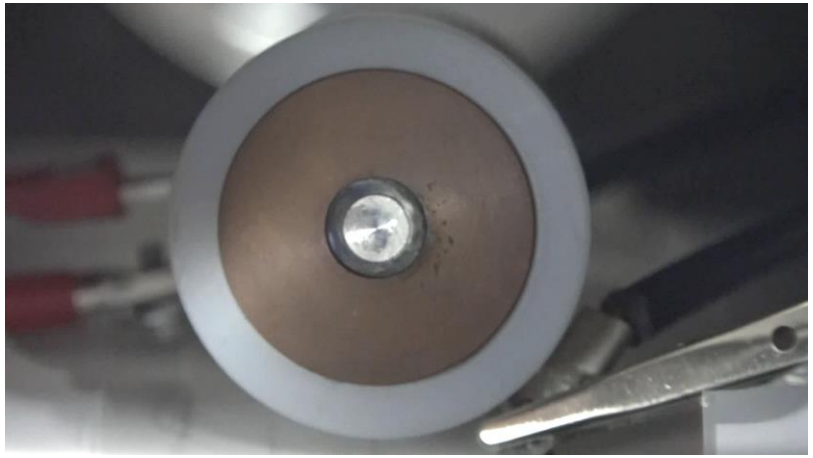

Al cathode discharge, 5Hz

Results and Discussion - Copper

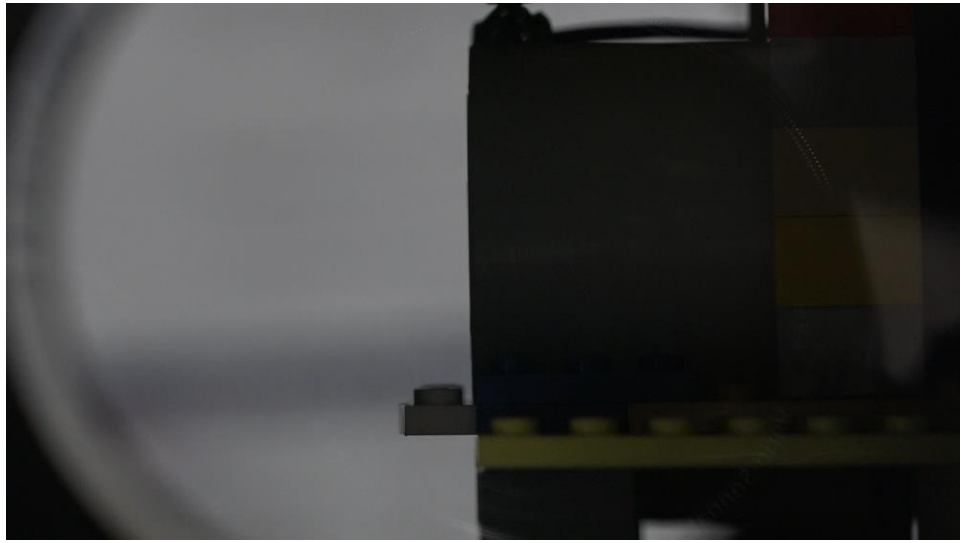

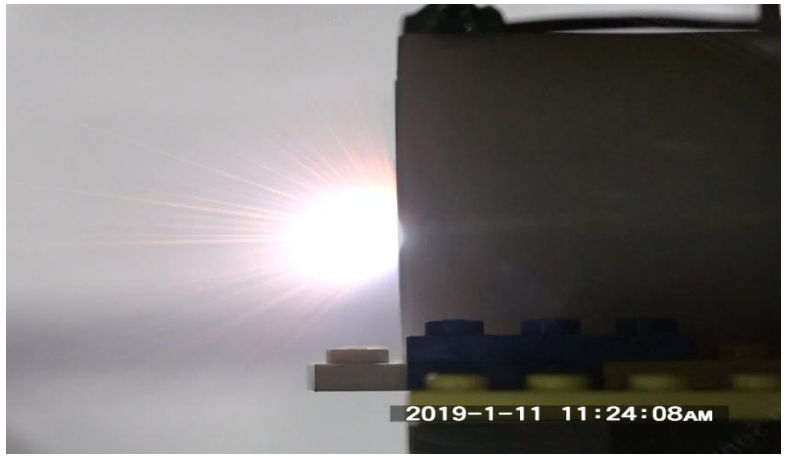

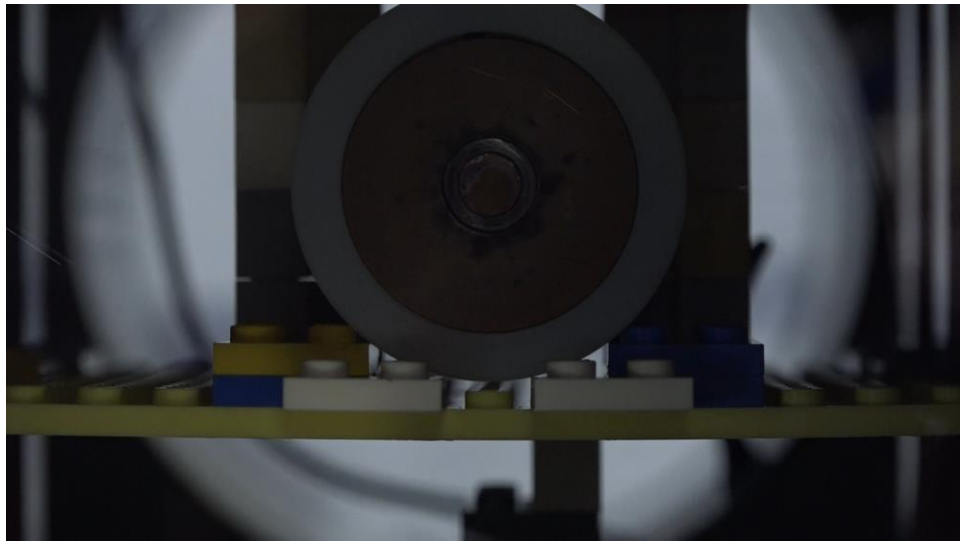

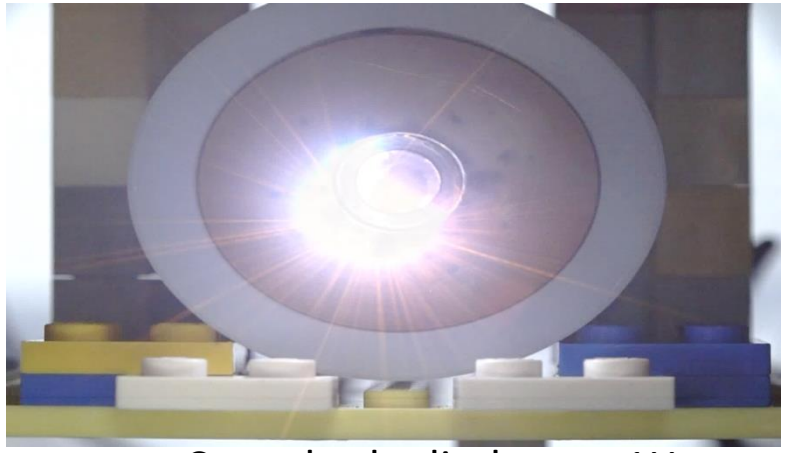

Cu cathode discharge, 1Hz

Results and Discussion

- **Discharge voltage and current**

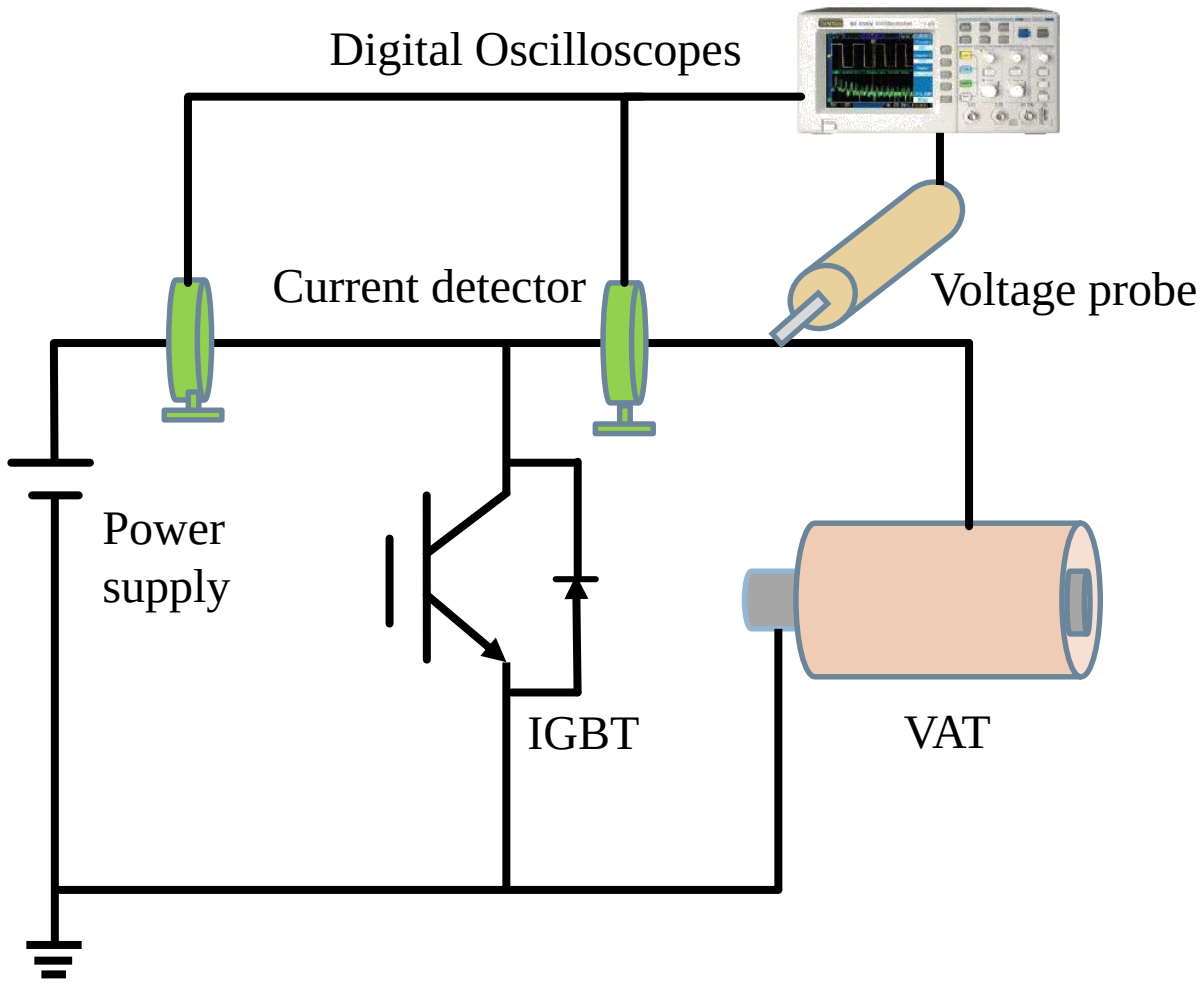

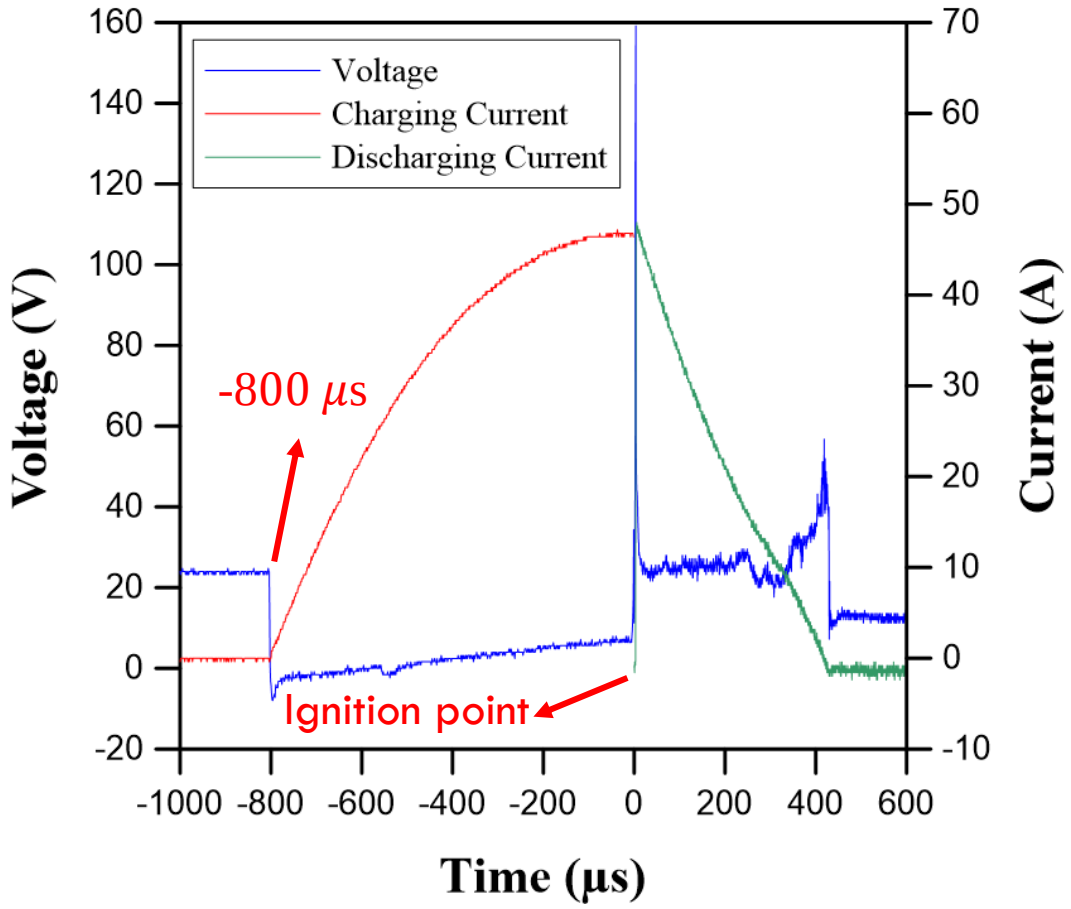

Results and Discussion

Ion detector

Ion fraction = a ratio of ion current to total current

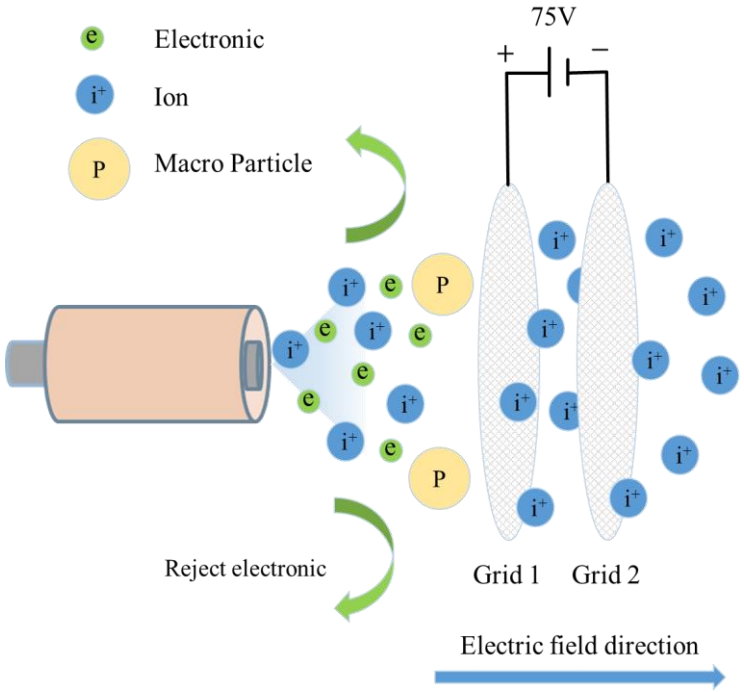

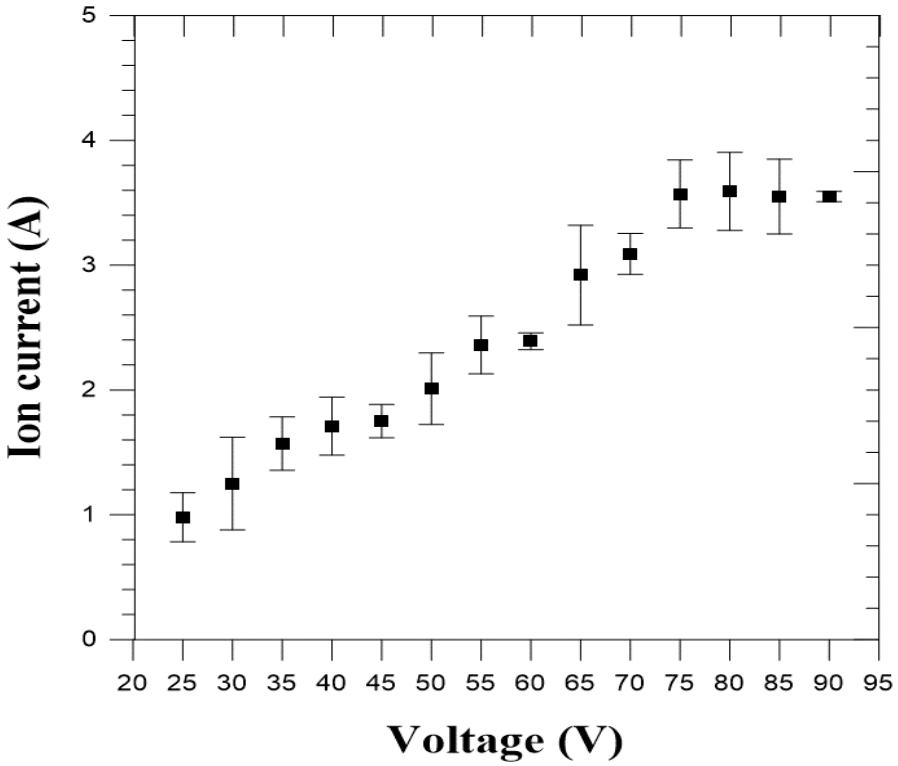

Ion fraction = 7.1%

$$\frac{1}{2}m\vec{V}^2 = eV$$

$\vec{V}$ = 23150 m/s

Results and Discussion

- **Erosion rate and lifetime**

After 70,000 pulse

Erosion rate = 0.1μg/pulse

Results and Discussion

- Result analysis

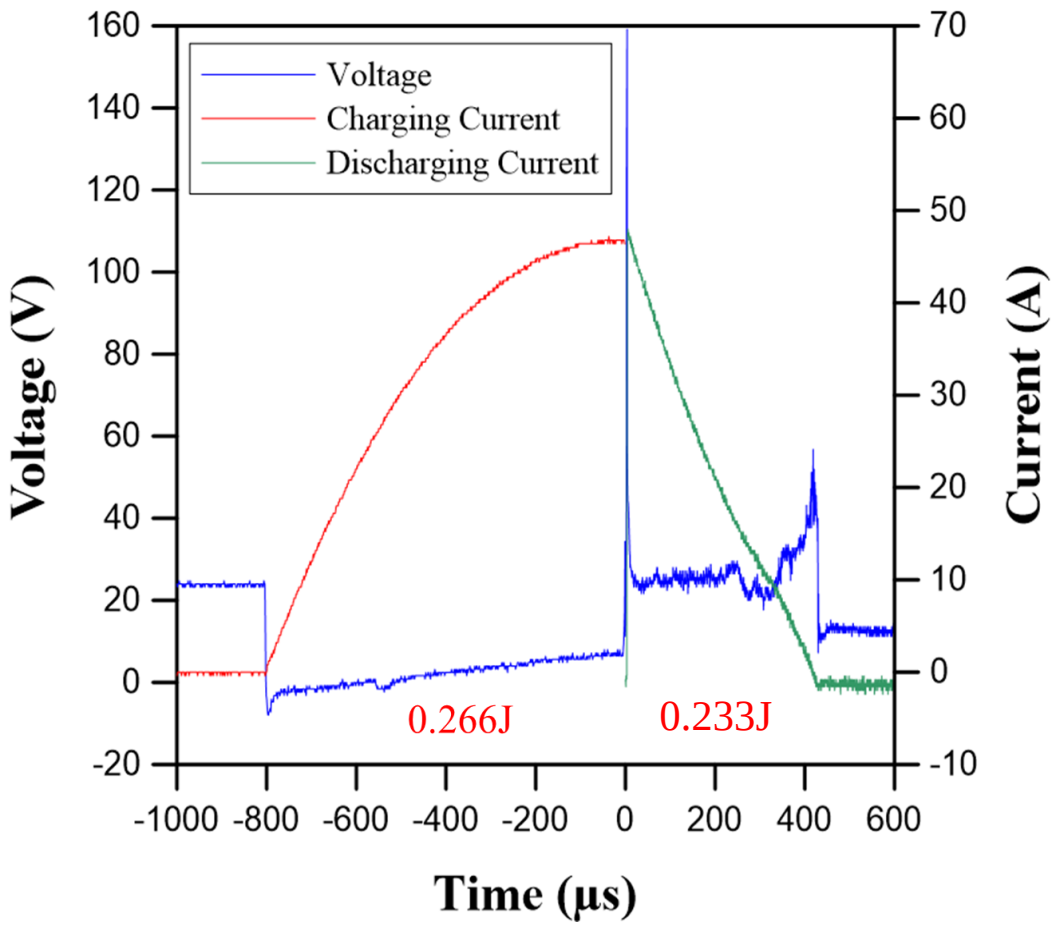

$$E = \sum IV\Delta t = 0.233\,J\,,$$

$$\mathrm{P} = E \times f = 0.233\,J \times 5\,Hz = 1.165\,W$$

Where E is discharge energy, I is discharge current, V is discharge Voltage, Δt is the time between each data point

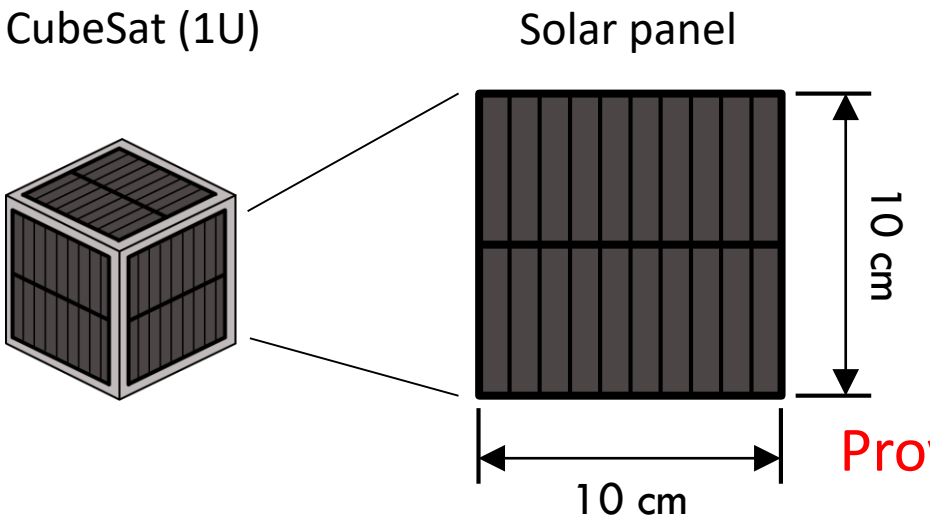

Provides 4 W

Conclusions

Comparison of this study with other VAT performance

Paper	Parameters					
	Supply voltage (V)	Discharge current (A)	Impulse bit (μNs)	Specific impulse (s)	Thrust to power (μN/W)	Efficiency (%)
Aheieva *et al.*	300	1000	2	1300	-	2.66
Schien *et al.*	12 ~ 30	26	30	> 1000	9.6	8.1
Schien *et al.*	24.7	20	1	-	2.2	5.6
Kronhaus *et al.*	15 ~ 35	11.5	0.11	850	4.4	1.2
Lun *et al.*	-	< 500	0.01	2400	-	-
Lun *et al.*	5	30	2.5	-	0.02	13
Schein *et al.*	5 ~ 24	100	1	1300	-	21
This study	**30**	**50**	**2.3**	**2360**	**8.7**	**10**

Conclusions

- **CubeSat performance requirements set out by ESA and NSPO**

Description	ESA	NSPO, Taiwan	This study
Micro-thruster module dry mass budget, kg	0.15 – 1.0	-	**0.11**
Number of micro thrusters per CubeSat	1 - 6	-	**-**
Power required by full assembly, W	1 - 10	< 20	**3**
Bus voltage, V	5 - 8	< 100	**30**
Minimum impulse bit, µNs	5	-	**2.3**
Specific impulse, s	60 - 1000	> 800	**2360**

Conclusions

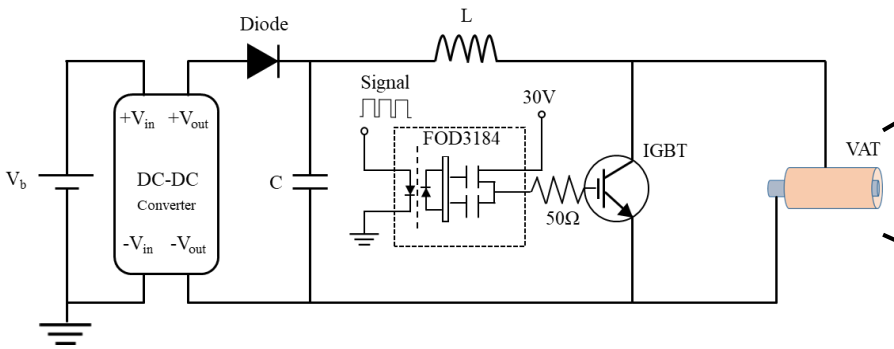

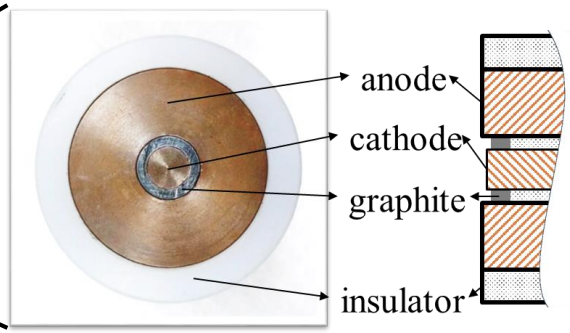

Weight of VAT: $112\ g$

Triggerless ignition

low complexity of system

Input energy: $0.233 J/pulse$

light

low power consumption

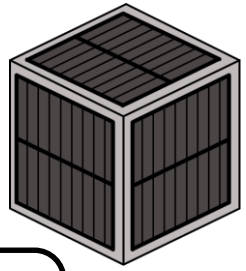

- Nanosatellite (1–10 kg)
- Picosatellite (0.1–1 kg)

This is the first VAT that ignited successfully in Taiwan!

Future Works

- Improvement of plasma diagnostic technology
- Thruster geometry and size design
- Circuit optimization

Thank you for attention

Yueh-Heng Li (Zic) 李約亨

- Associate Professor, Dept. Aeros. & Astros., NCKU, Taiwan

yuehheng.li@gmail.com

yueheng@mail.ncku.edu.tw

- ZAP Lab Website: http://59.125.238.48/zaplab/